Preface

Thanks for using SD700 series AC servo drive.

VEICHI SD700 series is the general purpose high performance servo drive which adopts a series of advanced motor control algorithm and 24-bit high precision encoder, featuring high control precision, fast tracking response, simple and convenient debugging to meet the function and performance requirements in high-end general purpose servo applications. Rich application functions such as built-in point control function, electronic cam, RS485 interface, CANopen interface and 16-bit analog input can provide high reliability and high cost performance solutions for machine tools, electronic equipment, robots, textile applications, packaging industry and etc.

This manual is delivered with equipment and only introduces safety precautions, installation and wiring, function code table, fault diagnoses and processing, monitoring parameters and etc. For detailed function explanations and application specifications please refer to SD700 series product instructions or consult VEICHI company. As it is the basic guide for proper use and safe operation, please carefully read and keep it and be sure to handle it to end users.

If any problems or special requirements, please feel free to contact our company, dealers or the customer service center, we will provide dedicated service for you.

This manual is subject to change without notice, thanks for your kind support.

Safety Precautions

For safety concerns, please fully understand the safety requirements and cautions before using.

Operational Qualifications

Only professional trained people are allowed to operate the equipment. In addition, operators must undergo professional skills training and be familiar with the equipment installation, wiring, operation and maintenance, and can correctly respond to various emergency situations in use.

Safety Guidance

Safety regulations and warning signs come for your security. They are measures to prevent the operator and machine system from damage. Please carefully read this manual before using and strictly observe the regulations and warning signs while operating.

- Correct transport, store, installation and careful operation and maintenance are important for servo system safe operation. In transport and store process, make sure the servo system is free from impact and vibration. It must be stored where is dry without corrosive air and conductive dust, and the temperature bust be lower than 60°C.
- This product carries dangerous voltage and controls driver machine with potential danger. If you don't abide by the regulations or requirements in this manual, there is danger of body injury even death and machine damage.
- Do not wire while the power is connected. Otherwise, there is danger of death for electric shock. Before wiring, inspection, maintenance, please cut off power supply of all related equipment and ensure main DC voltage in safe range. And operate it after 10 minutes.
- Power line, motor line and control line must be fastened. The grounding terminal must be grounded reliably and the grounding resistance is less than 10Ω.
- Human body static electricity will seriously damage the internal sensitive devices. Before operation, please follow ESD measures, or there will be danger of servo system damage.
- As the output voltage of servo system is pulse weave, if components such as capacitors for improving power factor or pressure-sensitive resistances for anti-thunder are installed at the output side, please dismantle them or change to input side.

Content

Chapter1 Installation and Wiring

1.1. Installation Dimensions

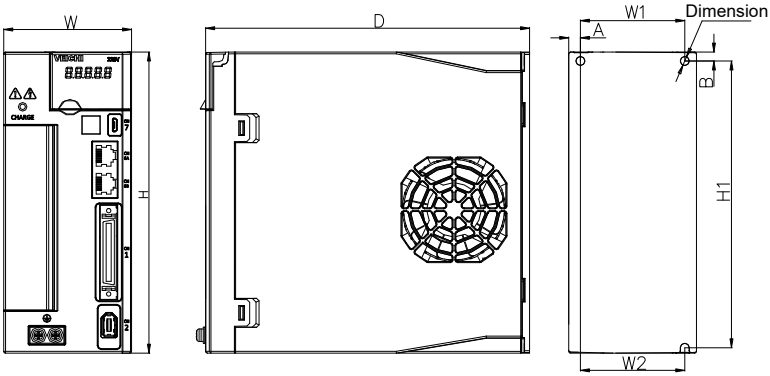

Structure	Model	Dimensions（mm）			Installation dimensions (mm)					Mounting aperture
		W	H	D	W1	W2	H1	A	B	
SIZE A	SD700-1R1A-**	45	168	170	\	20	160	7.5	5	2-M4
	SD700-1R8A-**									
	SD700-3R3A-**									
SIZE B	SD700-5R5A-**	71	168	180	58	58	160	6.5	5	3-M4
	SD700-7R6A-**									
	SD700-9R5A-**									
	SD700-2R5D-**									
	SD700-3R8D-**									
SIZE C	SD700-160A-**	92.5	188	182	82.5	75	180	5	5	3-M4
	SD700-6R0D-**									
	SD700-8R4D-**									
	SD700-110D-**									
SIZE D	SD700-170D-**	120	260	210	100	84.5	250	10	7.2	4-M5
	SD700-240D-**									
	SD700-300D-**									

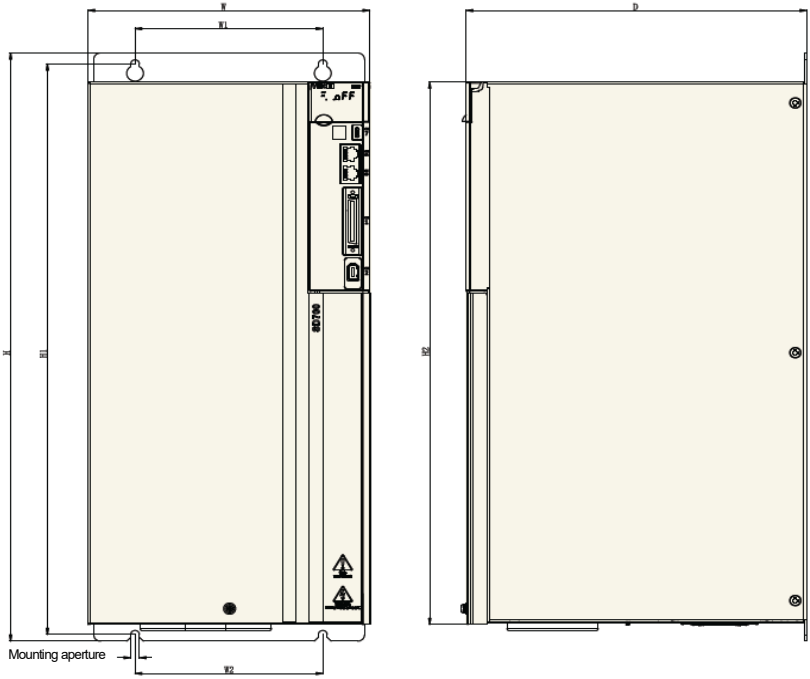

Structure	Model	Dimensions (mm)			Installation dimensions (mm)				Mounting aperture
		W	H	D	W1	W2	H1	H2	
SIZE E	SD700-500D-**	210	471	254	140	140	457	434.5	4-M6
	SD700-600D-**								
SIZE F	SD700-700D-**	240	558	310	176	176	544	520	4-M6
	SD700-800D-**								
	SD700-121D-**								

1.2. Main Circuit Terminal Size

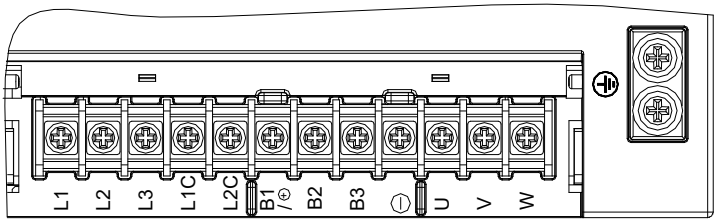

Main circuit interface		
Pins number	Sign name	Function
1	L1	Power input of the main circuit Please determine whether the input power is 220V or 400V according to the nameplate 220V models: 200V ~ 240V, -15% ~ +10% 50 / 60Hz 400V models: 380V ~ 440V, -15% ~ +10% 50 / 60Hz Note: "L3" terminal, SD700-1R1A, 1R8A, 3R3A models are single-phase inputs without this pin
2	L2	
3	L3	
4	L1C	Control power input Power input requirements same with L1, L2, L3
5	L2C	
6	B1/+	Regenerative resistor connection terminal SD700-1R1A, 1R8A, 3R3A. When regenerative braking capacity is insufficient, connect an external regenerative resistor between B1 / + and B2. Other models remove short wiring or short connection between B2 and B3. Connect an external regenerative resistor between B1 / + and B2. The external regenerative resistor need be purchased separately. "B1 / +" terminals can be used for common DC bus positive power supply terminals. Note: "B3" terminal, SD700-1R1A, 1R8A, 3R3A models without this pin.
7	B2	
8	B3	
9	-	"-" terminal can be used for common DC bus negative power supply terminals
10	U	Connect the U, V, W phase of the motor
11	V	
12	W	
13	⏚	Safe ground

1.3. CN1 Control Terminal

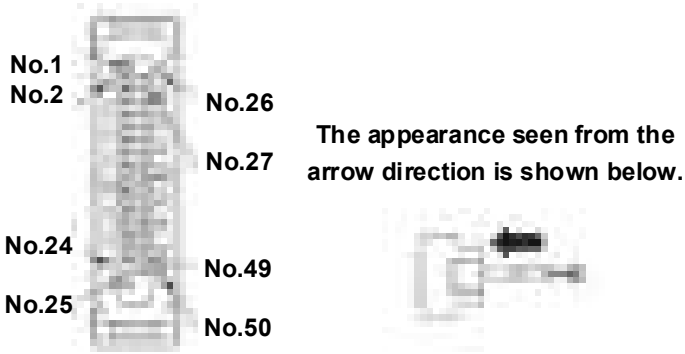

1	SG	Signal ground
2	SG	Signal ground
3	PL1	OC power output of command pulse
4	SEN	Requirement input of encoder absolute data (SEN)
5	V-REF	Speed command input
6	SG	Signal ground
7	PULS	Pulse command input
8	/PULS	Pulse command input
9	T-REF	Torque command input
10	SG	Signal ground
11	SIGN	Sign command input
12	/SIGN	Sign command input
13	PL2	OC power output of command pulse
14	/CLR	Clearance input of position deviation
15	CLR	Clearance input of position deviation
16	OCP	OC power input of command pulse
17	OCS	OC input of pulse direction
18	PL3	OC power output of command pulse
19	PCO	C phase of encoder pulse division output
20	/PCO	C phase of encoder pulse division output
21	BAT+	Battery(+) of absolute encoder
22	BAT-	Battery(-) of absolute encoder
23	OCZ	OC output of Z phase pulse division
24	OCS	OC input of pulse clearance
25	/SO1+ (V-CMP+)	General sequence control output 1
26	/SO1- (V-CMP-)	General sequence control output 2
27	/SO2+ (TGON+)	General sequence control output 2
28	/SO2- (TGON-)	General sequence control output 2
29	/SO3+ (S-RDY+)	General sequence control output 3
30	/SO3- (S-RDY-)	General sequence control output 3
31	ALM+	Servo alarm output
32	ALM-	Servo alarm output
33	PAO	A phase of encoder pulse division output
34	/PAO	A phase of encoder pulse division output
35	PBO	B phase of encoder pulse division output
36	/PBO	B phase of encoder pulse division output
37	STO	Safe torque limit
38	/SI8	General sequence control input 8
39	/SI9	General sequence control input 9
40	/SI0 (/S-ON)	General sequence control input 0
41	/SI3 (P-CON)	General sequence control input 3
42	/SI1 (P-OT)	General sequence control input 1
43	/SI2 (N-OT)	General sequence control input 2
44	/SI4 (/ALM-RTS)	General sequence control input 4
45	/SI5 (/P-CL)	General sequence control input 5
46	/SI6 (/N-CL)	General sequence control input 6
47	+24VIN	Power input of sequence control input signal
48	PSO	Position output of absolute encoder
49	/PSO	Position output of absolute encoder
50	TH	Overheat protection input of linear motor

1.4. CN2 Encoder Signal Terminal

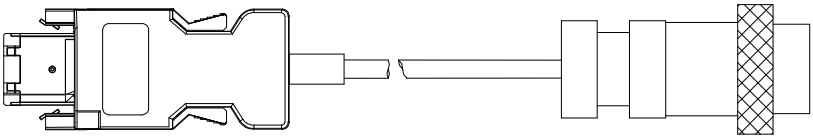

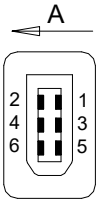

Pins Define		
Sign Define	AEnd Pins Number	BEnd Pins Number
+5V	1	1
0V	2	2
BAT+	3	3
BAT-	4	4
SD+	5	5
SD-	6	6
PE(Shield）	Iron Shell	7

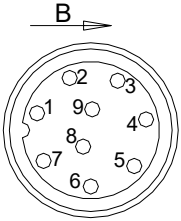

Note: When using multi-turn absolute encoder, please pay attention to the connection of battery and serial data.

1.5. Motor Power Terminal

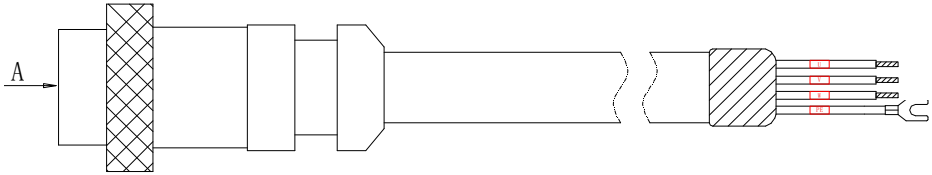

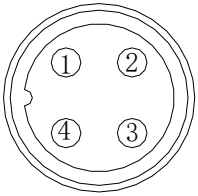

View A

40/60/80 Flange motor power line definition		
Signal defination	Teminal pin number	Line color
U	2	Blue
V	3	Brown
W	4	Red
PE	1	Yellow-green

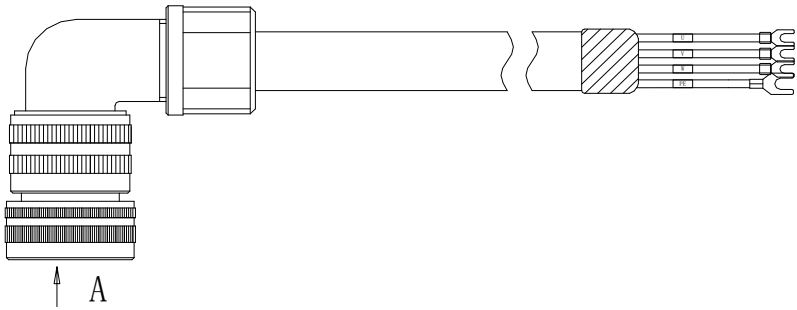

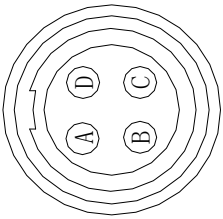

100/110/130/180/220 Flange motor power line definition		
Signal defination	Teminal pin number	Line color
U	A	Blue
V	B	Brown
W	C	Red
PE	D	Yellow-green

1.6. CN6A/CN6B Bus Communication Terminal

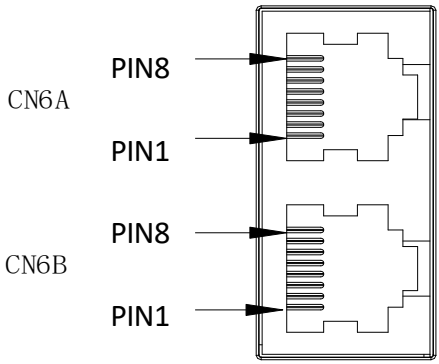

The definition of this port is different according to different models. When you use it, you need to confirm the model and then correspond to the definition of the interface.

The field identification bits are P: pulse type; S: standard type; C: CANopen bus type.

CN6A/CN6B Port definition					
Pin No.	Signal name	Function	Pin No.	Signal name	Function
1	CANH	CAN data+	6	-	
2	CANL	CAN data-	7	GND	485 signal ground
3	CANG	CAN signal	8	-	-

		ground			
4	485-	485 data-	shell	shield	shield
5	485+	485 data+			

The field identification bit is M: MECHATROLINK-II bus type.

CN6A/CN6B Port definition					
Pin No.	Signal name	Function	Pin No.	Signal name	Function
1	SRD+	M-II data+	6	-	-
2	SRD-	M-II data-	7	-	-
3	-	-	8	-	-
4	-	-	shell	shield	shield
5	-	-			

The field identification bit is N: EtherCAT bus type; L: MECHATROLINK-III bus type.

CN6A/CN6B Port definition					
Pin No.	Signal name	Function	Pin No.	Signal name	Function
1	TX+	Data transmission +	6	RX-	Data reception -
2	TX-	Data transmission -	7	-	-
3	RX+	Data reception +	8	-	-
4	-	-	shell	shield	shield
5	-	-			

Regarding the use of multiple drivers at the same time, the cascading method is CN6A in, CN6B out, the cascading cable should be under 50cm, and the last CN6B needs to be connected to the terminating resistor as appropriate.

1.7. Keyboard Layout and Function Specifications

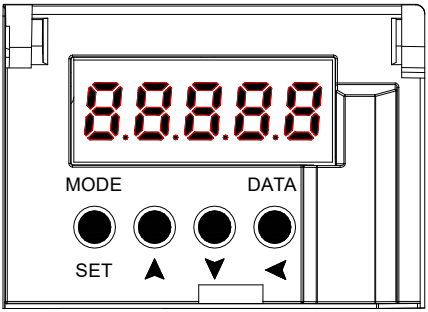

key	function
MODE/SET	Switch modes
	Parameter setting confirmation button
	Keys for auxiliary function execution
▲ UP	It is used to select the parameter upwards or increase the value. For the multi-segment display parameters, it can be used to switch the high, middle and low value display
▼ DOWN	Used to select parameters down or decrease the value, for multi-segment display parameters can be used to switch the high, middle and low value display
DATA/SHIFT	Long press DATA/SHIFT about1 s，Used to enter or exit
	Short press to move one bit to the left (when flashing)

Note: Press and hold the UP key and DOWN key at the same time to reset the servo alarm. Before resetting the servo alarm, be sure to eliminate the cause of the alarm.

1.8. Output Port Attentions

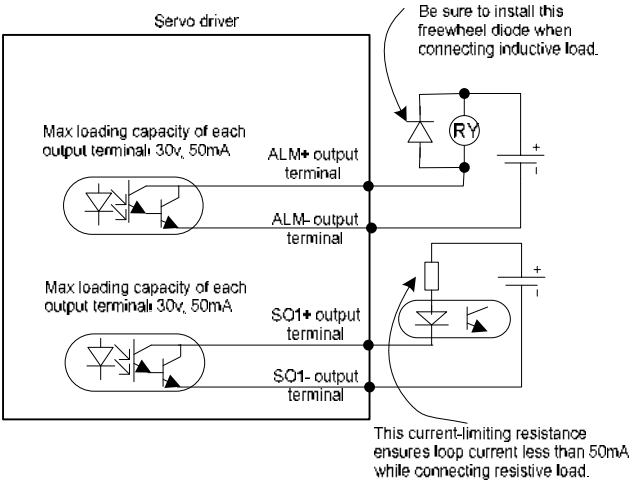

1.9. Brake Wiring

When servo motor is used for vertical axis situations, the brake can be used to prevent or keep the falling speed of heavy loads when servo drive is in power off state. Wiring diagram of electromagnetic brake is shown as below:

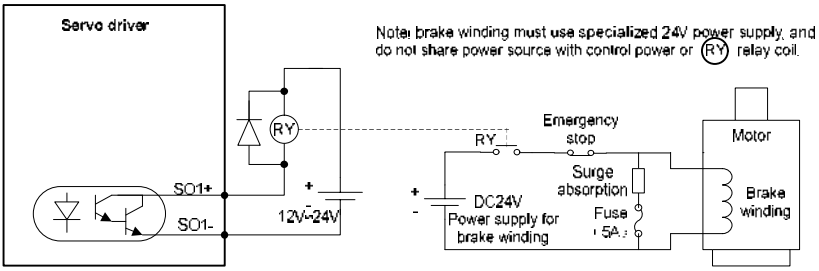

- Electromagnetic brake must be provided with a dedicated 24V power supply, be prohibited to share power source with control signal;
- RY means relay coil, please note the diode direction;
- Electromagnetic brakes are for holding and can not be used for normal parking;
- Though electromagnetic brake has function to prevent or keep heavy objects from falling, external braking devices are still necessary.

1.10. Position Control Wiring Diagram

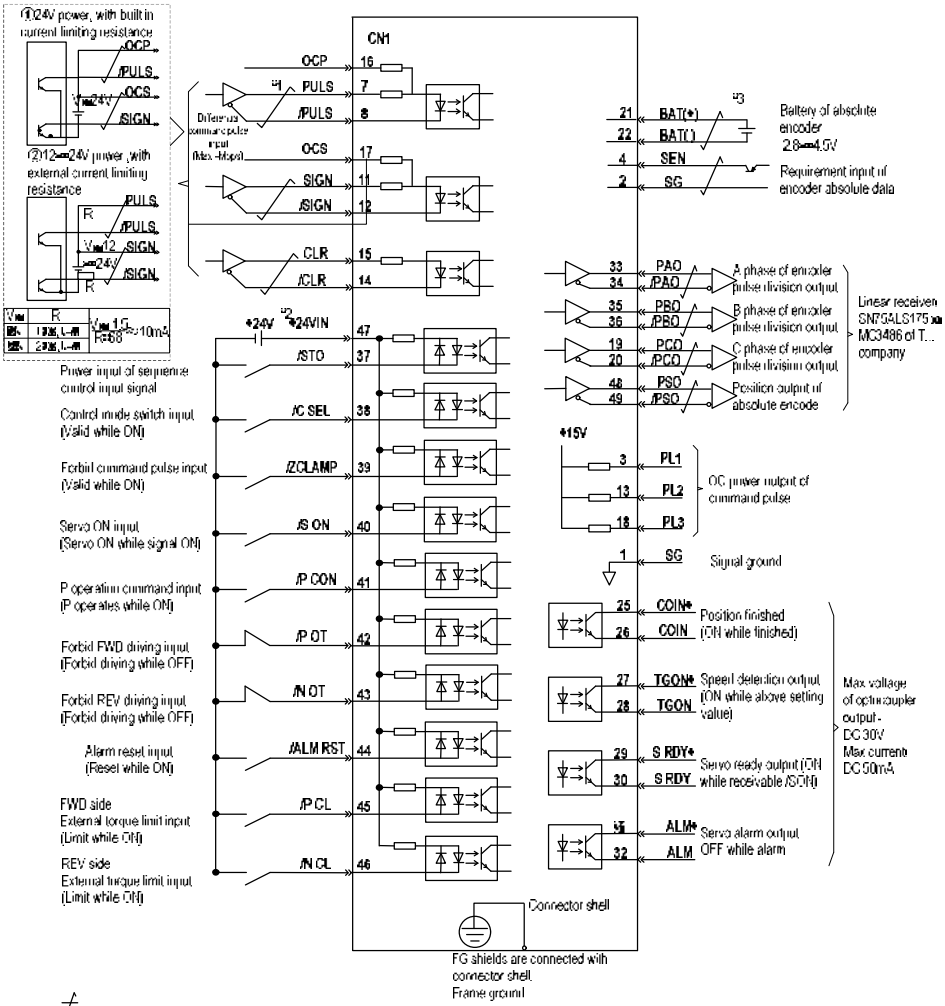

*1. ⧸ is twisted shields.

*2. DC24V power should be prepared by user. And double insulation or reinforced insulation equipments should be used for DC24V power.

*3. Connected while using absolute encoder. But never connect backup battery while using encoder cables with battery unit.

*4. Output signal should be received by linear receiver.

(Note) While using 24V BRaker,DC24V power should be separated Form the power for input and output signal (CN1) Please prepare other power individually, otherwise, there may be misoperation of input and output signal while power on.

1.11. Speed Control Wiring Diagram

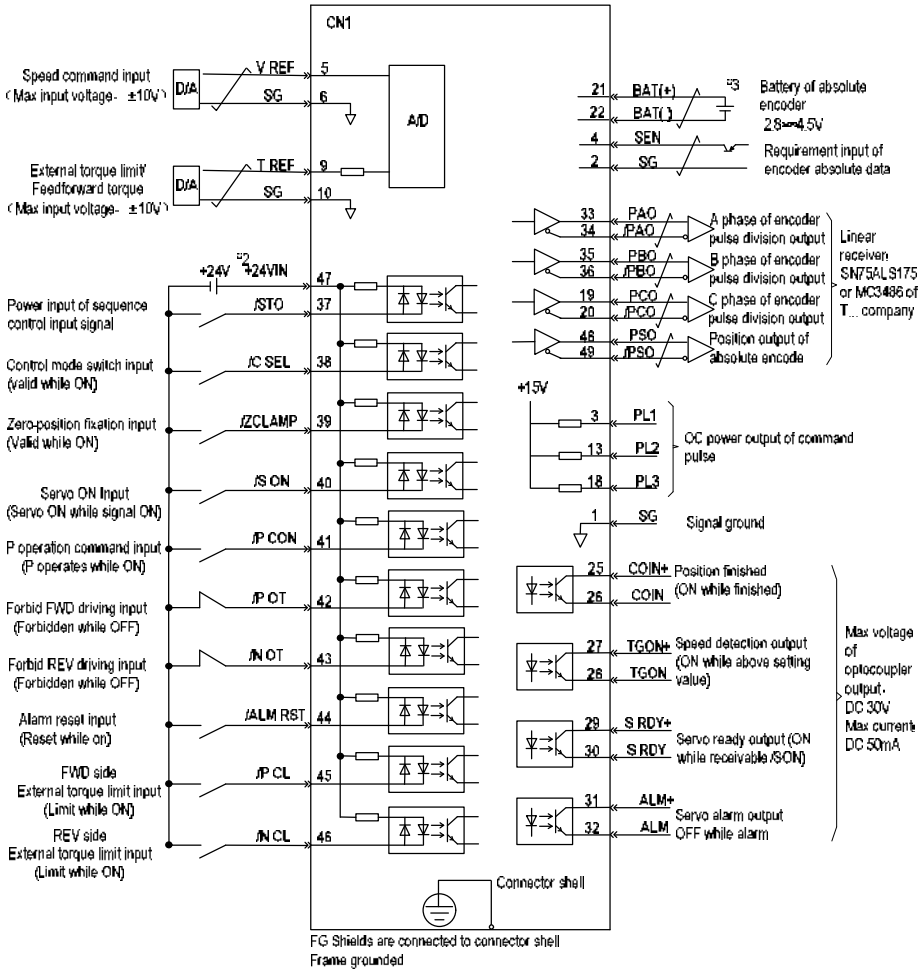

*1. ⧸ is the twisted shields

*2. DC24V power should be prepared by user. Double insulation or reinforced insulation equipments should be used for DC24V power.

*3. Connected while using absolute encoder. But never connect backup battery while using encoder cables with battery unit.

*4. Output signal should be received by linear receiver.

（Note） While using 24V BRaker,DC24V power should be separated Form the power for input and output signal (CN1),Please prepare other power individually, otherwise, there may be misoperation of input and output signal while power on.

1.12. **Torque Control Wiring Diagram**

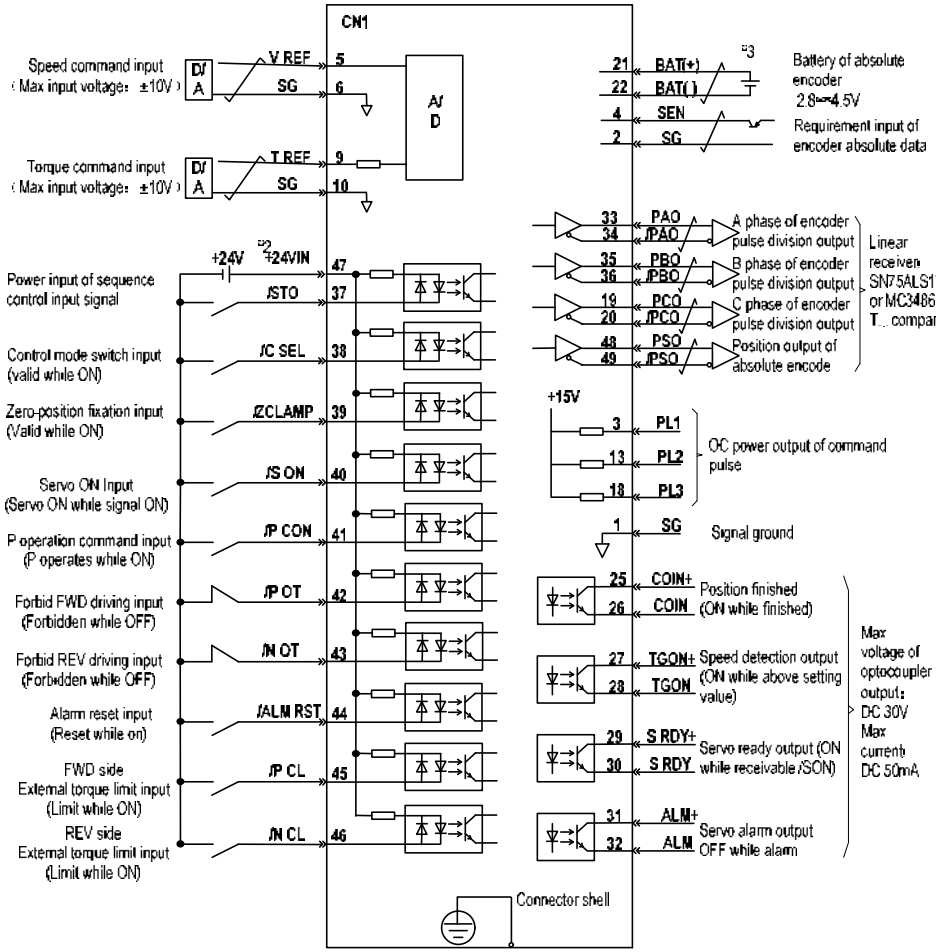

*1. ⊄ is the twisted shields

*2. DC24V power should be prepared by user. And double insulation or reinforced insulation equipments should be used for DC24V power.

*3. Connected while using absolute encoder. But never connect backup battery while using encoder cables with battery unit.

*4. Output signal should be received by linear receiver.

（Note） While using 24V BRaker,DC24V power should be separated Form the power for input and output signal (CN1).Please prepare other power individually, otherwise, there may be misoperation of input and output signal while power on.

Chapter2 Trial Run

2.1. JOG Trial Run

The purpose of JOG trial operation is to confirm whether the servo unit and servo motor are correctly connected and whether the servo motor is operating normally. The main parameters:

- Pn500 Set the jog speed (default value is 500rpm);
- Pn310 Set the jog acceleration time (default value 0ms);
- Pn311 sets the jog deceleration time (default value is 0ms);

For parameter setting panel operation, please refer to Pn group parameter setting method.

Setting method of parameter Pn group Setting method of parameter Pn group: Take the setting method when the speed loop gain (Pn101) setting value is changed from 40.0 to 100.0 as an example.

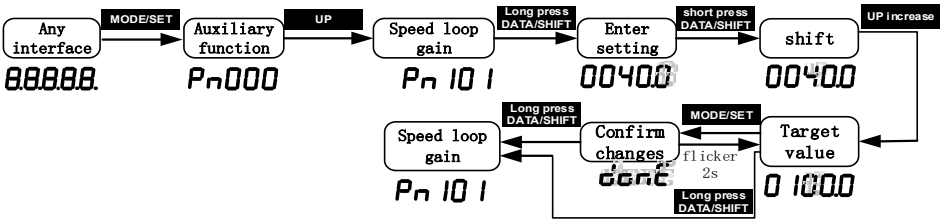

After the parameter setting is completed, execute auxiliary function Fn005, panel operation steps:

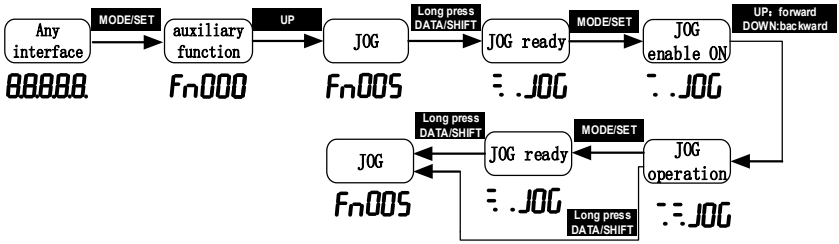

2.2. Bandwidth Setting（Fn303）

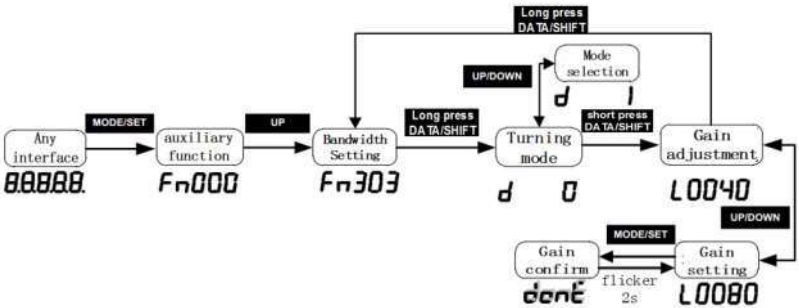

Chapter3 Function Code List

3.1 Pn0 Basic Control

Function code	Parameters	Range	Default	Unit	Address	Effective way
Pn000	Control mode selection	0~11	0	-	0x0000	RST
	0-Position mode 1-Analog speed 2-Torque mode 3-Inner speed 4-inner speed<->Analog speed 5- Inner speed <-> Position mode 6- Inner speed <-> Torque mode 7- Position mode <-> Analog speed 8- Position mode <-> Torque mode 9- Torque mode <-> Analog speed 10- Analog speed <->Speed mode for zero bit function 11- Position mode <->Position mode forbidden by command pulse					
Pn002	Motor rotation direction selection	0~1	0	-	0x0002	RST
	Facing the motor end face： 0- Positive counterclockwise 1- Clockwise is positive					
Pn003	Default monitoring parameters	0x0~0xfff	0xfff	-	0x0003	INST
	Set the monitoring parameters that are displayed by default after power-on. For the setting values, see the monitoring parameters. 0xfff means that the monitoring parameters are not displayed and the system status is displayed.					
Pn004	Servo OFF and stop method selection when the first type alarm occurs	0~2	0	—	0x0004	RST
	0- Stop the motor via DB 1- Stop the motor via DB，then release the DB 2- Without DB, the motor is in free motion					
Pn005	Selection of stop method for the second type of alarm generated by servo	0x00~0x01	0	—	0x0005	RST
	0- Zero speed stop：Set the speed command to "0" and execute a rapid stop 1- Same as Pn004 stop method					
Pn006	Over travel warning detection option	0~1	0	—	0x0006	RST
	0- Over travel warning is not detected when limit 1- Over travel warning detected when limit					
Pn007	Selection of stop method when servo over travel (OT) occurs	0~2	0	—	0x0007	RST
	Same as Pn004 stop method 1- Take the torque set by Pn053 as the maximum value, enter the locked state after decelerating and stopping 2- Take the torque set by Pn053 as the maximum value and enter free running state after decelerating and stopping					
Pn008	Servo lock time after	0~50	0	10ms	0x0008	INST

	electromagnetic brake holding					
	When the servo motor is enabled but not running, when it is in a stopped state, when the brake (/ BK) signal and the servo ON (/ S-ON) signal are both OFF, setting this parameter can change the brake (/ BK) signal OFF until the motor actually enter Unpowered time					
Pn009	Electromagnetic brake holding brake delay	10~100	50	10ms	0x0009	INST
	When the servo motor rotates when the servo is OFF / alarm occurs / the main circuit is OFF, the servo motor is not energized. The output time of the brake signal (/ BK) OFF can be adjusted by this parameter and the brake holding brake delay release speed (whichever is satisfied)					
Pn010	Electromagnetic brake holding brake delay release speed	0~10000	100	rpm	0x0010	INST
Pn012	External regenerative resistor power	0~65535	0	10W	0x0012	INST
Pn013	External regenerative resistance	0~65535	0	mΩ	0x0013	INST
Pn015	Overload warning value	1~100	20	%	0x0015	RST
	Set this parameter to change the overload warning detection time. For example, the overload warning detection time at the factory is 20%.					
Pn016	Motor overload detection base current derating setting	10~100	100	%	0x0016	RST
Pn030	Reserved parameters	0~65535	0	-	0x0030	INST
Pn031	Parameter modification operation lock	0~1	0	-	0x0031	RST
	0-Allow panel to modify parameters 1- Forbid panel to modify parameters					
Pn040	How to use the absolute encoder	0~1	0	—	0x0040	RST
	0- Use absolute encoder as absolute encoder 1- Use absolute encoder as incremental encoder					
Function code	Parameters	Range	Default	Unit	Address	Effective way
Pn041	Alarm / warning selection when the absolute encoder battery is under voltage	0~1	0	—	0x0041	RST
	0- Set low battery voltage as fault 1- Set low battery voltage as warning					
Pn045	Function selection under voltage	0x00~0x02	0	—	0x0045	RST
	0- No main circuit drop warning detected 1- Warning of main circuit drop detected 2- Detection of main circuit drop warning and operate torque limitation					
Pn046	Torque limit when the main circuit voltage drops	0~100	50	%	0x0046	INST
	According to the under-voltage warning, a torque limit is applied inside the servo unit, For details, please refer to the description of "Torque Limit in Under voltage".					

Pn047	Torque limit release time when the main circuit voltage drops	0~1000	100	ms	0x0047	INST
	After the under voltage warning release signal, the servo unit internally controls the torque limit value according to the set time. For details, see the description of "Main Circuit Under voltage Torque Limit"					
Pn050	Torque limit mode setting	0~3	1	-	0x0050	INST
	0 –Analog torque（invalid torque mode） 1 -Maximum torque limit 1 2 -Forward torque limit 1; Reverse torque limit 2 3 -Maximum torque limit 1 when the switching value "torque limit switching" is OFF; maximum torque limit 2 when it is ON					
Pn051	Maximum torque limit 1	0~500	500	%	0x0051	INST
Pn052	Maximum torque limit 2	0~500	500	%	0x0052	INST
Pn053	Emergency stop torque	0~800	800	%	0x0053	INST
Pn061	Panel parameter display selection	0x00~0x01	1	—	0x0061	RST
	0- Only display setting parameters 1- Show all parameters					
Pn070	Encoder frequency division pulse number	16~4194304	2048	-	0x0070	RST
	According to the setting value of this parameter, the frequency of pulses from the encoder per revolution is divided, please set according to the system specifications of the machine and the host device					
Pn072	Inverted crossover output	0~1	0	-	0x0072	RST
	0- Pulse output is not inverted：When forward, A leads B 1- Pulse output reversed: when forward, B leads A					
Pn080	Local communication address	0x00~0x7F	1	—	0x0080	RST
Pn081	485 communication baud rate selection	0~4	1	—	0x0081	RST
	0-9600bps 1-19200bps 2-38400bps 3-57600bps 4-115200bps					
Pn082	485 Communication verification method	0~5	1	—	0x0082	RST
	0- No check (N,8,1) 1- Even parity (E,8,1) 2- Odd parity (O,8,1) 3- No check (N,8,2) 4- Even parity (E,8,2) 5-Odd parity (O,8,2)					

3.2 Pn1 Gain Parameters

Function code	Parameters	Range	Default	Unit	Address	Effective way
Pn100	Rotary inertia ratio	0~20000	100	%	0x0100	INST
	Rotary inertia ratio = Motor shaft converted load rotary inertia /servo motor rotor rotary inertia *100%					
Pn101	First speed gain	1~2000	40.0	Hz	0x0101	INST
	Parameters to determine the responsiveness of the speed loop. When the responsiveness of the speed loop is low, it will become the delay element of the outer position loop. Therefore, overshoot or vibration of the speed command will occur. Within the range where the mechanical system does not vibrate, the larger the setting value, the more stable the servo system. The better the responsiveness					
Pn102	First speed integral time constant	0.15~512	20.00	ms	0x0102	INST
	In order to respond to small inputs, the velocity loop contains integral elements. Since the integral element is a delay element for the servo system, when the time parameter is set too large, overshoot will occur, or the positioning time will be prolonged, making the response worse					
Pn103	First position gain	1~2000	40.0	1/s	0x0103	INST
	The response of the position loop is determined by the position loop gain. The higher the position loop gain setting, the higher the responsiveness and the shorter the positioning time. The position loop gain cannot be increased beyond the rigidity of the mechanical system. To set the position loop gain to a larger value, the machine rigidity needs to be increased					
Pn104	First torque command filter	0~655.35	1.00	ms	0x0104	INST
	Adjusting the torque command filter parameters may eliminate the machine vibration caused by the servo drive. The smaller the value, the better the responsive control, but it is restricted by the machine conditions.					
Pn105	Second speed gain	1~2000	40.0	Hz	0x0105	INST
	Parameters to determine the responsiveness of the speed loop. When the response of the speed loop is low, it will become the delay element of the outer position loop. Therefore, overshoot or vibration of the speed command will occur. Within the range where the mechanical system does not vibrate, the larger the setting value, the more stable the servo system. The better the responsiveness					
Pn106	Second speed integral time constant	0.15~512	20.00	ms	0x0106	INST
	In order to respond to small inputs, the velocity loop contains integral elements. Since the integral element is a delay element for the servo system, when the time parameter is set too large, overshoot will occur, or the positioning time will be prolonged, making the response worse					
Pn107	Second position gain	1~2000	40.0	1/s	0x0107	INST

	The response of the position loop is determined by the position loop gain. The higher the position loop gain setting, the higher the responsiveness and the shorter the positioning time. The position loop gain cannot be increased beyond the rigidity of the mechanical system. To set the position loop gain to a larger value, the machine rigidity needs to be increased					
Pn108	Second torque command filter	0~655.35	1.00	ms	0x0108	INST
	Adjusting the torque command filter parameters may eliminate the machine vibration caused by the servo drive. The smaller the value, the better the responsive control, but it is restricted by the machine conditions.					
Pn110	The selection switch for gain switching mode	0x00~0x01	0	—	0x0110	INST
	0-Manual gain switching by manual gain switching external input signal (G-SEL) 1- When the automatic switching condition is established (Pn111), it automatically switches from the first gain to the second gain, otherwise, it switches back to the first gain					
Pn111	Automatic switching condition of position control gain	0x00~0x05	0	—	0x0111	INST
	0-Positioning completion signal ON 1-Positioning completion signal OFF 2-Positioning proximity signal ON 3-Positioning proximity signal OFF 4-Position command after filtering is 0 and pulse input OFF 5-Position command pulse input ON If the condition is met, then switch to the second gain, otherwise switch to the first gain					
Pn112	Gain switching transition time 1	0~65535	0	ms	0x0112	INST
	After waiting for the waiting time from the time when the switching condition has been established, linearly change the gain of the first position loop to the gain of the second position loop within the switching transition time					
Pn113	Gain switching transition time 2	0~65535	0	ms	0x0113	INST
	After waiting for the waiting time from the time when the switching condition has been established, the second position loop gain is linearly changed to the first position loop gain within the switching transition time					
Pn114	Gain switching delay time 1	0~65535	0	ms	0x0114	INST
	The time from the first gain to the second gain switching condition is established to the time when the switching starts					
Pn115	Gain switching delay time 2	0~65535	0	ms	0x0115	INST
	The time from the second gain to the first gain switching condition is established to the time when the switching starts					
Pn121	Speed feedforward gain	0~100	0	%	0x0121	INST

	Speed feedforward is a function to shorten the positioning time, which is effective when the servo unit performs position control Note: When the feedforward command is too large, position overshoot will occur, please set appropriately while observing the response					
Pn122	Speed feedforward filter time	0~64	0.00	ms	0x0122	INST
	Speed feedforward low-pass filter time constant, which can slow down the position overshoot and torque runout caused by feedforward					
Pn123	Use V-REF as the speed feedforward selection	0x00~0x01	0	—	0x0123	RST
	Speed feedforward is a function to shorten the positioning time, and the speed feedforward can be given by external analog V-REF 0-none 1-use V-REF as speed feedforward input					
Function code	Parameters	Range	Default	Unit	Address	Effective way
Pn124	Speed/Position control selection (T-REF distribution)	0~1	0	—	0x0124	RST
	Torque feedforward is a function to shorten the positioning time, and the torque feedforward can be given by external analog T-REF 0-none 1-use T-REF as torque feedforward input					
Pn130	Speed loop control method (PI/IP)	0~1	0	—	0x0130	RST
	0-PI control 1-I-P control					
Pn131	The selection switch of speed loop P/PI switch condition	0x00~0x04	0	—	0x0131	INST
	0-Condition to internal torque command 1-Condition to speed command 2-Condition to acceleration 3- Subject to position deviation pulses 4- No mode switching function					
Pn132	Speed loop P/PI switching condition (torque command)	0~800	200	%	0x0132	INST
	When the torque command exceeds the torque set by this parameter, the speed loop will switch to P control, otherwise it will be PI control					
Pn133	Speed loop P/PI switching condition (speed command)	0~10000	0	rpm	0x0133	INST
	When the speed command exceeds the speed set by this parameter, the speed loop will switch to P control, otherwise it will be PI control					
Pn134	Speed loop P/PI switching condition (acceleration speed)	0~30000	0	rpm/s	0x0134	INST

	When the speed command exceeds the acceleration set by this parameter, the speed loop will switch to P control, otherwise it will be PI control					
Pn135	Speed loop P/PI switching condition (position deviation)	0~10000	0	Command unit	0x0135	INST
	When the position deviation exceeds the value set by this parameter, the speed loop will switch to P control, otherwise it will be PI control					
Pn140	Medium frequency vibration suppression control selection	0x00~0x11	0x0010	—	0x0140	INST
	0x1 #: Automatically set the intermediate frequency vibration suppression frequency through intelligent settings and bandwidth settings 0x # 1: The intermediate frequency vibration suppression frequency setting is effective 0x0 #: It is not set automatically by intelligent setting or bandwidth setting, and can only be set manually. 0x # 0: Invalid setting of intermediate frequency vibration suppression frequency					
Pn142	medium frequency vibration suppression frequency	1~3000	100.0	Hz	0x0142	INST
	Set medium frequency vibration suppression frequency value.					
Pn143	medium frequency vibration suppression attenuation gain	0~300	0	%	0x0143	INST
	Increasing this parameter can improve the vibration suppression effect, but setting it too large may increase the vibration. Please confirm the vibration suppression effect and gradually increase the setting value in the range of 0% to 200% in units of 10%. When the vibration suppression effect cannot be obtained after reaching 200%, please stop the setting and reduce the control gain appropriately					
Pn150	Notch filter 1 automatic adjustment selection	0x00~0x01	1	—	0x0150	INST
	0 - automatic adjustment without auxiliary function 1 - automatic adjustment with auxiliary function					
Pn151	Notch filter 2 automatic adjustment selection	0x00~0x01	1	—	0x0151	INST
	0 - automatic adjustment without auxiliary function 1 - automatic adjustment with auxiliary function					
Pn152	Automatic notch resonance detection sensitivity	1~200	100	%	0x0152	INST
	It is used to set the sensitivity of automatic detection of resonance frequency. When the setting value is smaller, the more sensitive it is to resonance, the easier it is to detect vibration, and if it is too small, the resonance frequency may be detected by mistake					
Pn153	Notch filter 1 frequency	50~5000	5000	Hz	0x0153	INST

	Set the frequency of the second notch filter to suppress resonance. When this parameter is set to 5000, the function of the notch filter is invalid Note: do not set the notch filter frequency close to the response frequency of the speed loop, which should be at least 4 times of the gain of the speed loop, otherwise it may affect the overall performance of the system					
Pn154	Notch filter 1 Q value	0.5~10	0.70	-	0x0154	INST
	The Q value of notch filter refers to the set value of filter frequency width determined relative to notch filter frequency. The width of notch varies with notch filter Q value. The larger the Q value of notch filter is, the more severe the notch is, the narrower the filter frequency width is					
Pn155	Notch filter 1 depth	0~1	0.000	-	0x0155	INST
	The notch filter depth refers to the set value of the filter frequency depth relative to the notch filter frequency. The depth of the depression varies with the depth of the notch filter. The smaller the depth value of notch filter is, the deeper the notch is, the higher the vibration suppression effect is. But if it is too small, it will increase the vibration					
Pn156	Notch filter 2 frequency	50~5000	5000	Hz	0x0156	INST
	Set the frequency of the second notch filter to suppress resonance. When this parameter is set to 5000, the function of the notch filter is invalid.					
Pn157	Notch filter 2 Q value	0.5~10	0.70	-	0x0157	INST
	The Q value of a notch filter refers to the set value of the filter frequency width relative to the frequency of the notch filter. The width of the notch varies with the Q value of the notch filter. The larger the Q value of the notch filter, the more severe the depression, and the narrower the width of the filter frequency.					
Pn158	Notch filter 2 depth	0~1	0.000	-	0x0158	INST
	The depth of the notch filter refers to the set value of the filter frequency depth relative to the frequency of the notch filter. Depth of the depression varies with the depth of the notch filter. The smaller the depth value of the notch filter, the deeper the depression, the better the vibration suppression effect, but too small will increase the vibration					
Pn160	Disturbance compensation function selection	0x00~0x01	0	—	0x0160	INST
	Set up the disturbance compensation function switch: 0-Do not use 1-Use					
Pn161	Disturbance observer cutoff frequency	1~1000	150.0	Hz	0x0161	INST
	Setting the disturbance compensation gain can improve the effect of suppressing the disturbance effect, but too much noise will increase.					
Pn163	Disturbance compensation coefficient	0~100	0	%	0x0163	INST
	Set the disturbance compensation factor, set the position or speed instructions received, and add them to the disturbance compensation value of the torque instructions					
Pn165	Disturbance observer inertia correction coefficient	1~1000	100	%	0x0165	INST
	This parameter sets the disturbance observer's inertia to adjust the identification error caused by inaccurate inertia settings.					

	Note: When the inertia ratio is set correctly, the value is set to 100					
Pn166	Speed observer switch	0~1	0		0x0166	RST
	Set Speed Observation Function Switch: 0-Invalid 1-Valid					
Pn167	Speed observer cutoff frequency	1~500	80	Hz	0x0167	INST
	By setting the speed observer bandwidth with this parameter, increasing the set value will increase the response speed of the speed feedback value to track the true speed, too large is prone to vibration and noise					
Pn170	Friction torque compensation cutoff speed	0~1000	20	rpm	0x0170	INST
	Friction compensation is a function to correct viscous friction changes and fixed load changes. To adjust the friction compensation factor, usually set the friction compensation factor below 95%. If the effect is not obvious, increase the friction compensation cutoff speed by 10% in the range of no vibration.					
Pn171	Friction torque forward compensation coefficient	0~100	0	%/100rpm	0x0171	INST
	The more efficient the settings, the better the performance, but the higher the settings, the more likely the response will be to vibrate. Usually set the settings below 95%					
Pn172	Friction torque reverse compensation coefficient	0~100	0	%/100rpm	0x0172	INST
	The more efficient the settings, the better the performance, but the higher the settings, the more likely the response will be to vibrate. Usually set the settings below 95%					
Pn175	Robust control options	0x00~0x01	1	—	0x0175	RST
	Set Robust Control Function Switch: 0-Invalid 1-Effective					
Pn177	Robust control tuning values	10~80	40.0	Hz	0x0177	INST
	Set a gain tuning value for robust control. The larger the value, the faster the system responds. However, system overshoot and noise may occur.					
Pn178	Minimum load values of robust control	0~500	0	%	0x0178	INST
	Set the load factor of robust control. The larger the value, the faster the system response. However, there may be excessive system noise. When the inertia is large, increasing the value appropriately can reduce overshoot and overshoot.					
Pn185	Vibration detection selection	0x00~0x02	0	—	0x0185	INST
	0-No vibration detection 1-Warning after vibration detection 2-Warning after vibration detection					
Pn186	Vibration detection sensitivity	50~500	100	%	0x0186	INST
	Set the sensitivity to detect vibration. The smaller the setting value, the more sensitive it is. Setting too small may misdirect vibration in normal operation					
Pn187	Vibration detection value	0~5000	50	rpm	0x0187	INST
	Set the threshold for vibration detection. The smaller the setting, the easier it is to detect vibration. Setting too small may misdirect vibration in normal operation					

3.3 Pn2 Positional Parameters

Function code	Parameters	Range	Default	Unit	Address	Effective way
Pn200	Command pulse input selection (low/high speed filter)	0~2	0	-	0x0200	RST
	0-line drive filter ~ 1MHZ 1-open collector filter 2-line drive filter 1 ~ 4MHZ					
Pn201	Pulse input form	0~6	0	-	0x0201	RST
	0-pulse + direction positive logic 1-CW + CCW positive logic 4-quadrature encoding 4 times 5-pulse + direction negative logic6-CW + CCW negative logic					
Pn202	Reversed pulse input direction	0~1	0	-	0x0202	RST
	Set the inverse selection of pulse input direction: 0-positive polarity 1-negative polarity					
Pn203	Command pulse input rate	1~100	1	x1 time	0x0203	INST
	Set the command pulse input magnification value, used with the command pulse magnification switching signal ON / OFF, switch the position command pulse input magnification to 1 times and the multiple set by this parameter					
Pn204	Electronic gear ratio numerator	0~1073741824	64	-	0x0206 0x0207	RST
Pn206	Electronic gear ratio denominator	1~1073741824	1	-	0x0208 0x0209	RST
	Position mode full closed loop is invalid: $\frac{\text{Electronic gear ratio numerator}}{\text{Electronic gear ratio denominator}} = \frac{\text{Encoder resolution}}{\text{Host system 1 r pulse number}} \times \text{Decceleration ratio} \quad N1/N2$ When full closed loop is valid: $\frac{\text{Electronic gear ratio numerator}}{\text{Electronic gear ratio denominator}} = \frac{\text{the movement amount of input command one pulse}}{\text{the movement amount of grating ruler inputs one pulse}} = \frac{0.5/}{0.5} = 1/1$					
Pn211	Position command low pass filter time constant	0~655	0	ms	0x0211	STOP
	Use this parameter to set the time constant of the first-order low-pass filter corresponding to the position command. Setting this parameter can reduce the mechanical shock when the input pulse command frequency changes suddenly.					
Pn212	Position command slide average filter time	0~1000	0	ms	0x0212	STOP
	Use this parameter to set the time constant of the moving average filter corresponding to the position command. Setting this parameter can reduce the mechanical shock when the input pulse command frequency changes suddenly					
Pn230	Low frequency vibration	0x00~0x02	0	—	0x0230	INST

Function code	Parameters	Range	Default	Unit	Address	Effective way
	suppression selection					
	0-No vibration suppression 1-Add vibration suppression function to a specific frequency 2-Add vibration suppression function to 2 different frequencies					
Pn231	Low frequency vibration suppression function automatic tuning selection	0x00~0x01	1	—	0x0231	INST
	0-Vibration suppression function does not automatically adjust through auxiliary functions 1-Vibration suppression function automatically adjusts through auxiliary functions					
Pn232	Low-frequency vibration detection sensitivity (relative positioning is completed)	0.1~300	40.0	%	0x0232	INST
	This parameter sets the sensitivity of low-frequency vibration detection when positioning is completed. The smaller the sensitivity setting, the easier it is to automatically detect the low-frequency vibration frequency point					
Pn235	Low frequency vibration suppression 1 frequency	1~200	200.0	Hz	0x0235	INST
	This parameter is used to set the frequency of low frequency vibration suppression 1					
Pn236	Low frequency vibration suppression 1 correction	10~1000	100	%	0x0236	INST
	This parameter is used to set the correction coefficient of low-frequency vibration suppression 1. The larger the value, the more obvious the low-frequency suppression effect. If it is too small, the positioning time may be too long					
Pn237	Low frequency vibration suppression 2 frequency	1~200	200.0	Hz	0x0237	INST
	This parameter is used to set the frequency of low frequency vibration suppression 2					
Pn238	Low frequency vibration suppression 2 correction	10~1000	100	%	0x0238	INST
	This parameter is used to set the correction coefficient of low-frequency vibration suppression 2. The larger the value is, the more obvious the low-frequency suppression effect is.					
Pn240	Model tracking control Selection	0x00~0x01	0	—	0x0240	INST
	0-do not use model tracking control 1-use model tracking control					
Pn241	Model tracking control gain	1~2000	50.0	1/s	0x0241	INST
	The size of the model tracking control gain determines the response speed of the servo system. Increasing the model tracking control gain will make the response faster and the positioning time shorter. When the model tracking control is effective, the position response and deviation of the servo system are determined by this parameter, not Position gain					
Pn242	Model tracking control attenuation coefficient	50~200	100.0	%	0x0242	INST

Function code	Parameters	Range	Default	Unit	Address	Effective way
	The model tracking attenuation coefficient is reduced, the position setting section is easy to overshoot and the overshoot becomes larger, and if the setting is too small, the position oscillation is easily caused. When it is increased, the position overshoot is reduced, but when it is too large, the position is easy to rebound, resulting in the positioning time changing. Long, it is recommended to keep the value unchanged at 100 in general use					
Pn243	Model tracking control speed feedforward gain	0~1000	100.0	%	0x0243	INST
	The feedforward gain of the model tracking speed is reduced, the response is slower, but it is not easy to produce position overshoot and overshoot, and too small is easy to cause a long position deviation ending time					
Pn244	Model tracking control forward torque feedforward gain	0~1000	100.0	%	0x0244	INST
	Positive position command, this parameter is used when adjusting the positive response separately. When the value is increased, the torque feedforward rises faster, which can shorten the positioning time appropriately.					
Pn245	Model tracking control reverse torque feedforward gain	0~1000	100.0	%	0x0245	INST
	Negative position command. Use this parameter when adjusting the negative response separately. When the value is increased, the torque feedforward rises faster, which can shorten the positioning time appropriately.					
Pn246	Model 2 tracking control gain	1~2000	50.0	1/s	0x0246	INST
	Used when the model tracking is effective, the second gain					
Pn247	Model 2 tracking control Attenuation coefficient	50~200	100.0	%	0x0247	INST
	Used when the model tracking is effective, the second gain					
Pn249	Speed/Torque Feedforward Selection	0x00~0x01	0	—	0x0249	INST
	0-do not use model tracking control and external speed and torque feedforward at the same time 1-use model tracking control and external speed and torque feedforward simultaneously					
Pn250	Instructions of external encoders under full closed loop control mode	0~3	0	—	0x0250	RST
	0-0-do not use full closed loop function 1-use in standard running direction 2-use in reverse running direction					
Pn252	Motor load division coefficient while tuning 1 cycle under full closed loop	0~100	20	%	0x0252	INST

Function code	Parameters	Range	Default	Unit	Address	Effective way
	Set the coefficient processing of the deviation between the motor and the load after the motor runs for 1 lap. If this parameter is set to 0%, the deviation after the first lap is 1000, and the deviation at the beginning of the second lap is 1000, and set to 20% , The deviation at the start of the second lap is 200 () and accumulated. If this value is set too large, Er.d10 may not be detected normally, and it should be set according to the allowable error between the load and the motor.					
Pn253	External grating ruler resolution	4~1048576	32768	Pulse/r	0x0253 0x0254	RST
	Set the motor to run one circle, and the resolution of the external scale (after 4 times frequency).					
Pn257	excessive motor-load deviation setting	0~1073741824	1000	Command unit	0x0257 0x0258	INST
	Set the alarm threshold for excessive deviation between motor and load. If this value is set too small, Er.d10 may be detected by mistake.					
Pn260	Position NEAR signal width	1~1073741824	1073741824	Command unit	0x0260 0x0261	INST
	During position control, the host device can receive the positioning approach signal before confirming the positioning completion signal, to prepare for the action sequence after the positioning is completed, which can shorten the time required for the action when the positioning is completed, the command pulse number and servo The signal is output when the difference (position deviation) of the motor movement amount is lower than the set value					
Pn262	Position arrival range	0~1073741824	7	Command unit	0x0262 0x0263	INST
	During position control, it indicates the signal that the servo motor positioning is completed. When the difference between the command pulse number from the upper device and the movement amount of the servo motor (position deviation) is lower than the set value of this parameter, the positioning completion signal will be output for the upper device Confirm positioning is complete					
Pn264	Maximum tolerance value of position deviation	1~1073741823	5242880	Command unit	0x0264 0x0265	INST
	When the motor operation does not match the command, by setting an appropriate maximum threshold value for position deviation, abnormal conditions can be detected and the motor can be stopped.					
Pn266	Large position deviation alarm setting	10~100	100	%	0x0266	INST
	This parameter sets the warning threshold for excessive position deviation. When the position deviation is greater than the product of the "maximum position deviation threshold" and this parameter, an excessive position deviation warning					
Pn267	Alarm threshold for	1~107374182	5242880	Comman	0x0267	INST

Function code	Parameters	Range	Default	Unit	Address	Effective way
	excessive position deviation when servo is ON	3		d unit	0x0268	
	This parameter is used to set the threshold value of the excessive position deviation alarm when the servo is ON					
Pn269	Warning threshold for position deviation when servo is ON	10~100	100	%	0x0269	INST
	This parameter sets the warning threshold for excessive position deviation at the moment of servo-on. When the servo is turned on, the position deviation is greater than the product of "the position deviation is too large when the servo is turned on" and this parameter.					
Pn270	Speed limit value when servo is ON	0~10000	10000	rpm	0x0270	INST
	If the servo is turned on in the state where the position deviation is accumulated, the speed limit is executed with this parameter. Enter the command pulse in this state, and the alarm displayed when the setting value of "Maximum Position Deviation Threshold" is exceeded "Alarm Excessive Position Deviation Caused by Speed Limit When Servo ON"					
Pn272	Position deviation clear mode	0x00~0x03	0	—	0x0272	RST
	0-Clear when the level is ON 1-Clear when the rising edge is OFF-> ON 2-Clear when the level is OFF 3-Clear when the falling edge is ON-> OFF					
Pn273	Selection of position deviation clearing method	0x00~0x02	0	—	0x0273	RST
	0-servo OFF, alarm, / CLR signal position deviation can be cleared 1- / CLR signal position deviation can be cleared 2- Alarm, / CLR signal position deviation can be cleared					
Pn274	Positioning completion signal output time	0x00~0x02	0	—	0x0274	RST
	0- output when the absolute value of position deviation is less than the positioning completion range (Pn262) 1- The absolute value of the position deviation is less than the positioning completion range (Pn262) and the filtered position command is output when the command is 0 2- Output when the absolute value of position deviation is less than the positioning completion range (Pn262) and the position command input is 0					

3.4 Pn3 Speed Parameters

Function code	Parameters	Range	Default	Unit	Address	Effective way
Pn300	Analog speed command gain	150~3000	600	0.01V/rated	0x0300	INST
	Use this parameter to set the analog voltage value (V-REF) required by the speed command to make the servo motor speed at the rated value Note: Do not apply voltages above -10 ~ 10V. Exceeding this range may cause damage to the driver					
Pn301	Reversed analog speed command	0~1	0	-	0x0301	INST
	Set the voltage polarity of the analog speed command: 0-positive polarity: positive voltage corresponds to positive speed command 1-negative polarity: positive voltage corresponds to negative speed command					
Pn302	Analog speed command filter time	0~655.35	0.40	ms	0x0302	INST
	The function of applying a delay filter to the analog speed command (V-REF) input once to smooth the speed command usually does not need to be changed. If the setting value is too large, the responsiveness may be reduced. Please set while confirming the responsiveness					
Pn303	Analog speed command dead area range	0~3	0	V	0x0303	INST
	During analog speed control, even if the input command is 0V, the servo motor may rotate at a slight speed. This is because the command within the servo unit has a slight deviation, which can be eliminated by setting an appropriate analog speed command dead band range					
Pn304 Pn305 Pn306	Internal speed 1	0~10000	100	rpm	0x0304	INST
	Internal speed 2	0~10000	200	rpm	0x0305	INST
	Internal speed 3	0~10000	300	rpm	0x0306	INST
	/SPD-A /SPD-B speed command OFF OFF zero speed OFF ON Internal speed 1 ON ON Internal speed 2 ON OFF Internal speed 3					
Pn310	Speed command trapezoidal acceleration time	0~10000	0	ms	0x0310	INST
	The time required to accelerate the set speed from 0r / min to the maximum speed (corresponding to the motor model)					
Pn311	Speed command trapezoidal deceleration	0~10000	0	ms	0x0311	INST

Function code	Parameters	Range	Default	Unit	Address	Effective way
	time					
	Set the maximum speed (corresponding to the motor model), The time required for deceleration to 0r / min. When the given speed is greater than or less than the maximum speed, the actual deceleration time is calculated proportionally.					
Pn312	Speed zero-clamp mode	0~3	3	-	0x0312	INST
	0-invalid 1- speed command is set to 0, no clamping after stopping 2- speed command is set to 0, clamping after stopping 3- The speed command is lower than the "zero speed clamp speed threshold", the speed command is set to 0 first, and the clamp after the stop					
Pn313	Speed zero-clamp threshold	0~10000	10	rpm	0x0313	INST
	Set the zero control switching threshold when the "zero speed clamp mode" is set to 3					
Pn317	Rotation judgment threshold	1~10000	20	rpm	0x0317	INST
	When the motor speed is above the set value, the digital rotation detection signal (/ TGON) is output					
Pn320	Consistent speed range	0~100	10	rpm	0x0320	INST
	When the difference between the motor speed and the commanded speed is below the set value, the switching speed matching signal (/ V-CMP) is output					

3.5 Pn4 Torque Parameters

Function code	Parameters	Range	Default	Unit	Address	Effective way
Pn400	Torque command selection	0~1	1	-	0x0400	INST
	Select the command source of torque control: 0-internal setting 1-analog input					
Pn401	Torque command 2nd order low pass filter cutoff frequency	100~5000	5000	Hz	0x0401	INST
	Use this parameter to set the cutoff frequency of the second-order torque filter. When this parameter is set to 5000, the filter function is invalid					
Pn402	Torque command 2nd order low-pass filter Q value	0.5~1	0.50	1	0x0402	INST
	Use this parameter to set the Q value of the second-order torque filter. Increasing the Q value can improve the system responsiveness, but if the setting is too large, noise will be generated					
Pn403	Torque command direction setting	0~1	0	-	0x0403	INST
	0- Torque command direction selection (/ T-SIGN) signal is invalid 1- Torque command direction selection (/ T-SIGN) signal is valid					
Pn404	Analog torque command filter time	0~655.35	0.00	ms	0x0404	INST
	The function of applying a delay filter to the input of the analog torque command (T-REF) to smooth the torque command usually does not need to be changed. If the setting value is too large, the responsiveness may be reduced. Please confirm while responding. set up					
Pn405	Analog torque command gain	10~100	30	0.1V/rated torque	0x0405	INST
	Use this parameter to set the analog voltage value required for the rated torque of the servo motor (T-REF)					
Pn406	Reversed analog torque command	0~1	0	-	0x0406	INST
	0-positive polarity: positive voltage corresponds to positive torque command 1-negative polarity: positive voltage corresponds to negative torque command					
Pn407	Analog torque command dead area range	0~3	0	V	0x0407	INST
	During analog torque control, even if the input command is 0V, the servo motor may rotate at a slight speed. This is because the command within the servo unit has a slight deviation, which can be eliminated by setting an appropriate analog torque command dead band range					
Pn410	Internal torque command under torque control	-500~500	0	%	0x0410	INST
	Select the torque control command source as the internal torque command size setting					
Pn411	Speed limit mode		1	-	0x0411	RST

	setting during torque control					
	0- the speed corresponding to the analog voltage (V-REF) and the speed set by Pn413, the smaller of the two values 1- the speed set by Pn413					
Pn412	Speed limit selection	0x00~0x01	0	—	0x0412	RST
	0- motor maximum speed (determined internally by the motor model) + torque mode speed limit (Pn411) 1-Overspeed detection alarm speed (determined internally by the motor model) + torque mode speed limit (Pn411)					
Pn413	speed limit under torque control	0~10000	1000	rpm	0x0413	INST
	Set speed limit during torque control, used with Pn411					

3.6 Pn5 JOG Related Parameters

Function code	Parameters	Range	Default	Unit	Address	Effective way
Pn500	JOG speed	0~1000	500	rpm	0x0500	INST
Pn502	Program JOG running mode	0x00~0x05	0	—	0x0502	INST
	0- (wait time-> forward movement) * number of cycles 1- (wait time-> reverse movement) * number of cycles 2- (wait time-> forward movement) * number of cycles-> (wait time-> reverse movement) * number of cycles 3- (waiting time-> reverse movement) * number of cycles-> (waiting time-> forward movement) * number of cycles 4- (wait time-> forward movement-> wait time-> reverse movement) * number of cycles 5- (wait time-> reverse movement-> wait time-> forward movement) * number of cycles					
Pn503	Program JOG moving distance	1~1073741824	32768	Command unit	0x0503	INST
	Set the running distance of the running program JOG as the command unit					
Pn505	Program JOG acceleration/deceleration time	2~10000	100	ms	0x0505	INST
	The time required to accelerate the set speed from 0r / min to the rated speed (corresponding to the motor model)					
Pn506	Program JOG waiting time	0~10000	100	ms	0x0506	INST
	Set the waiting time between the JOG segments of the running program, in conjunction with the program JOG running mode (Pn502)					
Pn507	Program JOG moving times	0~1000	1	回	0x0507	INST
	Set the number of JOG movements of the running program, in conjunction with the running mode of the program JOG (Pn502)					
Pn508	Program JOG moving speed	1~10000	500	rpm	0x0508	INST

3.7 Pn6 Switch Configuration Related Parameters

Function code	Parameters	Range	Default	Unit	Address	Effective way
Pn600	Switch input signal distribution mode	0~1	1	-	0x0600	RST
	0- Internal fixation 1- Parameter configuration					
Pn601	CN1-40 Input configuration	0~0x114	0x01	-	0x0601	RST
Pn602	CN1-42 Input configuration	0~0x114	0x02	-	0x0602	RST
Pn603	CN1-43 Input configuration	0~0x114	0x03	-	0x0603	RST
Pn604	CN1-41 Input configuration	0~0x114	0x05	-	0x0604	RST
Pn605	CN1-44 Input configuration	0~0x114	0x04	-	0x0605	RST
Pn606	CN1-45 Input configuration	0~0x114	0x06	-	0x0606	RST
Pn607	CN1-46 Input configuration	0~0x114	0x07	-	0x0607	RST
Pn608	CN1-39 Input configuration	0~0x114	0x00	-	0x0608	RST
Pn609	CN1-38 Input configuration	0~0x114	0x00	-	0x0609	RST

	0x00: invalid 0x01: Servo enable 0x101: Servo enable negation 0x02: Positive direction limit 0x102:Release positive direction limit 0x03:Negative direction limit 0x103: Release negative direction limit 0x04: Alarm clear 0x104: Alarm clear negation 0x05: Manual PI-P control 0x105: Manual PI-P control negation 0x06: Torque limit switching 0x106: Torque limit switching reversed 0x07:Reserved 0x107: Reserved 0x08: Internal speed command direction selection 0x108: Internal speed command direction selection D negation 0x09: Internal speed command selection A 0x109: Internal speed command selection A negation 0x0A: Internal speed command selection B 0x10A: Internal speed command selection B negation 0x0B: Control mode switching 0x10B: Control mode switching negation 0x0C: Zero speed clamp 0x10C: Zero speed clamp negation 0x0D: Command pulse prohibition 0x10D: Command pulse prohibition negation 0x0E: Gain switching 0x10E: Gain switching negation 0x0F: Torque command direction selection 0x10F: Torque command direction selection negation 0x10: Command pulse integral magnification switching 0x110: Command pulse integral magnification switching negation.

Pn610 Pn611 Pn612	Switch input internal configuration 1	0~0x14	0x00	-	0x0610	RST
	Switch input internal configuration 2	0~0x14	0x00	-	0x0611	RST
	Switch input internal configuration 3	0~0x14	0x00	-	0x0612	RST
	0x00:invalid 0x01:servo enable 0x02: Release positive direction limit 0x03: Release negative direction limit 0x04:Alarm clear 0x05: Manual PI-P control 0x06:torque limit switching 0x08: Internal speed command direction selection 0x09: Internal speed command direction selection A 0x0A: Internal speed command direction selection B 0x0B:Control mode switching 0x0C: Zero speed clamp 0x0D: Pulse input prohibited 0x0E:gain switching 0x0F: Torque command direction selection 0x10: Command pulse rate switching					
Pn613 Pn614 Pn615	CN1-25,26 output configuration	0~0x109	0x000	-	0x0613	RST
	CN1-27,28 output configuration	0~0x109	0x001	-	0x0614	RST
	CN1-29,30 output configuration	0~0x109	0x002	-	0x0615	RST
	0x00: Servo ready 0x100: Servo ready signal negation					

	0x01: Positioning completed 0x101: Positioning completed signal negation 0x02: Consistent speed 0x102: Consistent speed signal negation 0x03: Rotation detection signal 0x103: Rotation detection signal negation 0x04: Torque is limiting 0x104: Torque is limiting signal negation 0x05: Speed is limiting 0x105: Speed is limiting signal negation 0x06: Brake interlock 0x106: Brake interlock signal negation 0x07:Alarm 0x107:Alarm signal negation 0x08:Positioning approach signal 0x108: Positioning approach signal negation 0x09: Command pulse input integral magnification switching signal 0x109: Command pulse input integral magnification switching signal negation					
Pn622	Function selection switch	0x00~0x11	0	—	0x0622	RST
	0x1 #: Digital output alarm output (ALM) signal high effective 0x0 #: Digital output alarm output (ALM) signal low effective 0x # 1: No warning is detected 0x # 0: Warning is detected					

3.8 Pn7 Extension Related Parameters

Function code	Parameters	Range	Default	Unit	Address	Effective way
Pn730	No-motor test function selection	0x00~0x01	0	—	0x0730	RST
	0-Invalid 1-Valid					
Pn731	No-motor test function encoder resolution selection	0~3	1	—	0x0731	RST
	When the motorless test mode is selected, the resolution of the motor encoder settings: 0-13bits 1-17bits 2-20bits 3-23bits					
Pn732	No-motor test function encoder type selection	0x00~0x01	0	—	0x0732	RST
	Set the encoder type without motor test function: 0-incremental encoder 1-absolute encoder					
Pn792	Absolute encoder operation	0~2	0	—	0x0792	RST
	0- No action 1- Write motor parameters to encoder EEPROM 2- Clear the number of encoder turns					

Chapter4 Monitoring Parameters

Monitor code	Monitoring name	Range	Unit	Address
Un000	Motor rotation speed	0x80000000~0x7FFFFFFF	rpm	0xE000
Un001	Speed command	0x80000000~0x7FFFFFFF	rpm	0xE001
Un002	Internal torque command	0x80000000~0x7FFFFFFF	%	0xE002
Un003	Rotor pulse position relative to the Z axis	0x80000000~0x7FFFFFFF	pulse	0xE003
Un004	Electrical angle	0x80000000~0x7FFFFFFF	°	0xE004
Un005	Pulse speed of input command	0x80000000~0x7FFFFFFF	rpm	0xE005
Un006	Counter of input command pulse	0x80000000~0x7FFFFFFF	Command unit	0xE006
Un007	Counter of feedback pulse	0x80000000~0x7FFFFFFF	Command unit	0xE007
Un008	Counter of feedback pulse 1	0x80000000~0x7FFFFFFF	Encoder pulse unit	0xE008
Un009	Position deviation	0x80000000~0x7FFFFFFF	Command unit	0xE009
Un010	Absolute encoder single circle value	0x80000000~0x7FFFFFFF	Encoder unit	0xE010
Un011	Absolute encoder several circle value	0x80000000~0x7FFFFFFF	-	0xE011
Un012	External encoder feedback pulse counter	0x80000000~0x7FFFFFFF	External encoder unit	0xE012
Un00A	Cumulative load factor	0x80000000~0x7FFFFFFF	%	0xE00A
Un00B	Regeneration load rate	0x80000000~0x7FFFFFFF	%	0xE00B
Un00C	DB resistance consumes power	0x80000000~0x7FFFFFFF	%	0xE00C
Un00D	Effective gain monitoring	1~2	—	0xE00D
Un00E	Total running time	0~0xFFFFFFFF	100ms	0xE00E
Un00F	Overload rate	0~0xFFFFFFFF	%	0xE00F
Un035	ARM Software version number	0~0xFFFF	-	0xE035
Un036	FPGA Software version number	0~0xFFFF	-	0xE036
Un089	Drive internal temperature	0~0xFFFF	℃	0xE090
Un100	IO port input signal monitoring	0~0xFFFF	—	0xE100

Un101	IO port output signal monitoring	0~0xFFFF	—	0xE101
Un102	T-REF monitoring	0~0xFFFF	%	0xE102
Un103	V-REF monitoring	0~0xFFFF	rpm	0xE103
Un104	Pulse command input frequency	0~0xFFFFFFFF	Hz	0xE104
Un108	External input command pulse counter	0~0xFFFFFFFF	Command unit	0xE108
Un110	Internal signal status monitoring synthesis	0~0xFFFFFFFF	—	0xE110
Un120	Internal input signal status monitoring synthesis	0~0xFFFFFFFF	—	0xE120
Un130	Internal output signal status monitoring synthesis	0~0xFFFFFFFF	—	0xE130
Un140	Main circuit bus voltage	0~0xFFFF	V	0xE140
Un141	Effective value of current feedback	0~0xFFFF	0.01A	0xE141
Un300	Current alarm code	0~0xFFFF	—	0xE300
Un301	Last alarm code	0~0xFFFF	—	0xE301
Un302	Timestamp when the alarm occurred	0~0xFFFFFFFF	100ms	0xE302
Un303	Motor rotation speed when an alarm occurs	0~0xFFFF	rpm	0xE303
Un304	Speed command at the time of alarm	0~0xFFFF	rpm	0xE304
Un305	Internal torque command when an alarm occurs	0~0xFFFF	%	0xE305
Un306	Input command pulse speed when an alarm occurs	0~0xFFFF	rpm	0xE306
Un307	Deviation counter when an alarm occurs	0~0xFFFFFFFF	pulse	0xE307
Un308	Main circuit bus voltage when an alarm occurs	0~0xFFFF	V	0xE308
Un309	Effective value of current feedback when alarm occurs	0~0xFFFF	%	0xE309
Un30A	Cumulative load factor at the time of alarm	0~0xFFFF	%	0xE30A
Un30B	Regeneration load rate at the time of alarm	0~0xFFFF	%	0xE30B
Un30C	The DB resistor consumes power when an alarm occurs	0~0xFFFF	%	0xE30C
Un30D	Maximum cumulative load rate when an alarm occurs	0~0xFFFF	%	0xE30D
Un30E	Rotational inertia ratio at the time of alarm	0~0xFFFF	%	0xE30E
Un30F	Number of serial encoder	0~0xFFFF	—	0xE30F

	communication abnormalities when an alarm occurs			
Un310	Internal signal monitoring when an alarm occurs	0~0xFFFFFFFF	-	0xE310
Un313	Internal input signal monitoring when an alarm occurs	0~0xFFFFFFFF	-	0xE313
Un317	Internal output signal monitoring when an alarm occurs	0~0xFFFFFFFF	-	0xE317
Un320	Fault code history 1	0~0xFFFF	-	0xE320
Un321	Fault code history 2	0~0xFFFF	-	0xE321
Un322	Fault code history 3	0~0xFFFF	-	0xE322
Un323	Fault code history 4	0~0xFFFF	-	0xE323
Un324	Fault code history 5	0~0xFFFF	-	0xE324
Un325	Fault code history 6	0~0xFFFF	-	0xE325
Un326	Fault code history 7	0~0xFFFF	-	0xE326
Un327	Fault code history 8	0~0xFFFF	-	0xE327
Un328	Fault code history 9	0~0xFFFF	-	0xE328
Un329	Fault code history 10	0~0xFFFF	-	0xE329
Un330	Fault time history 1	0~0xFFFFFFFF	100ms	0xE330
Un331	Fault time history 2	0~0xFFFFFFFF	100ms	0xE331
Un332	Fault time history 3	0~0xFFFFFFFF	100ms	0xE332
Un333	Fault time history 4	0~0xFFFFFFFF	100ms	0xE333
Un334	Fault time history 5	0~0xFFFFFFFF	100ms	0xE334
Un335	Fault time history 6	0~0xFFFFFFFF	100ms	0xE335
Un336	Fault time history 7	0~0xFFFFFFFF	100ms	0xE336
Un337	Fault time history 8	0~0xFFFFFFFF	100ms	0xE337
Un338	Fault time history 9	0~0xFFFFFFFF	100ms	0xE338
Un339	Fault time history 10	0~0xFFFFFFFF	100ms	0xE339

Chapter5 Auxiliary Function

The auxiliary functions are displayed as numbers beginning with Fn, which perform functions related to the operation and adjustment of servo motor.

The following table lists the auxiliary functions and reference items.

Auxiliary function code	Function description	Auxiliary function code	Function description
Fn 000	Display alarm history	Fn 102	Torque command offset manual adjustment
Fn 001	Clear alarm history	Fn 103	Automatic adjustment of current bias
Fn 002	Software reset	Fn 104	Manual adjustment of current bias
Fn 003	Restore factory parameters	Fn 105	Initialize the detected value of vibration detection
Fn 005	JOG operation	Fn 303	Bandwidth setting
Fn 006	Program JOG operation	Fn 401	Easy FFT
Fn 100	Automatic adjustment of command offset	Fn 402	Online vibration monitoring
Fn 101	Manual adjustment of speed command offset		

Chapter6 Faults and Warnings

6.1. Fault Code

Fault code	Fault type	Countermeasures	Alarm type
Er.020	Parameters and check abnormal	1. After initializing the parameter settings, enter the parameters again 2. First write the power level of the drive to 0, and then write the correct power level. Note: After the power level is written, current detection correction, analog input correction, and bus voltage correction must be performed 3. The servo drive is faulty, replace the servo drive	1
Er.021	Parameters formatted abnormal (inconsistent version)	1. Perform a soft reset. If the fault is still reported, first write the power level of the drive to 0, and then write the correct power level. Note: After the power level is written, current detection correction, analog input correction, and bus voltage correction must be performed 2. The servo drive is faulty, replace the servo drive	1
Er.022	System and check abnormal	1. Perform a soft reset. If the fault is still reported, first write the power level of the drive to 0, and then write the correct power level. Note: After the power level is written, current detection correction, analog input correction, and bus voltage correction must be performed 2. The servo drive is faulty, replace the servo drive	1
Er.040	Parameters setting abnormal	1. Check whether the changed parameters are out of range 2. Check whether the setting of electronic gear ratio is within the setting range (electronic gear ratio: 0.001 ~ 16777216/1000) 3. Check whether the capacity of the servo drive and the servo motor match 4. I / O terminal definition is repeated	1
Er.041	Frequency -dividing pulse output setting abnormal	According to the number of encoder bits, set the encoder frequency division pulse number to an appropriate value, see the manual for details	1
Er.042	Parameter combination abnormal	1. Make the setting value of the electronic gear ratio within the setting range 2. Make the relevant settings of the program JOG logical	1
Er.050	Mismatching drive and motor capacity	1. Check whether the driver power and motor power are correct 2. Replace the drive or motor so that it is within a reasonable range	1
Er.0B0	Invalid alarm of servo on command	Power-on again or perform a soft reset	1

Er.100	Over current	1. Check if the motor phase sequence is wrong 2. Check whether the motor is damaged, use a multimeter to measure whether the U / V / W is short to ground 3. Check whether the encoder angle of the motor is correct 4. Use a virtual oscilloscope to monitor the AD value of the UV phase current sampling in the disabled state to determine whether it is a driver hardware current sampling failure, which is normally near 0	1
Er.510	Over speed	1. Confirm whether there is a problem with the motor wiring and whether the three phases of UVW are reversed 2. Confirm whether the encoder has abnormal connection 3. Confirm whether the maximum speed setting in the motor parameters is correct 4. Confirm whether the input command exceeds the overspeed value 5. Reduce the servo gain, or set a certain smoothing time	1
Er.511	Frequency -dividing pulse output over speed	1. Reduce the number of frequency-divided output pulses per lap (Pn070) 2. If the operating conditions allow, reduce the motor running speed	1
Er.520	Vibration alarm	1. If the operating conditions allow, reduce the motor speed. Or reduce the speed loop gain. 2. Set the rotational inertia ratio correctly 3. Appropriately set the vibration detection value (Pn187) and vibration detection sensitivity (Pn186)	1
Er.550	Max speed setting abnormal		1
Er.710	Overload (instantaneous max load)	1. Check whether there is a locked rotor when the motor is running 2. Confirm whether there is any problem with the motor wiring (phase sequence and connection) and encoder wiring 3. Consider the operating conditions and load to determine whether the drive or motor selection is reasonable 4. Observe whether the motor has large jitter and large noise during operation. If so, adjust the gain parameter to eliminate noise or jitter. At the same time, use a virtual oscilloscope to monitor whether the motor output torque is abnormal.	2
Er.720	Overload (constant max load)	1. Confirm whether there is any problem with the motor wiring (phase sequence and connection) and encoder wiring 2. Consider operating conditions and loads to determine whether the drive or motor selection is reasonable 3. Observe whether there is large jitter and large noise during the operation of the motor. If so, adjust the gain parameter to eliminate noise or jitter. At the same time, use a virtual	1

		oscilloscope to monitor whether the motor output torque is abnormal.	
Er.730	BD overload 1	1. The load is too heavy during shutdown, causing the DB resistor to overload, try to reduce the running speed or reduce the load 2. Check whether the motor is driven by external force 3. According to customer needs, re-evaluate whether you need to use DB mode during shutdown, if not, you can choose another way to shutdown 4. If the fault is reported in the last operation, the power will wait for a period of operation	1
Er.7A0	Heat sink overheat	1. With fan drive, check whether the air duct is blocked and the fan is damaged 2. Check the driver installation conditions, whether the heat dissipation conditions are good, and improve the heat dissipation conditions of the driver as much as possible. 3. Check the load condition of the driver. If the load is too heavy, the customer can be advised to replace the driver in the high power section. 4. If conditions permit, reduce the carrier frequency of the driver	2
Er.810	Encoder backup abnormal	1. Check the battery power supply of the multi-turn encoder 2. Perform the zero-turn action of the multi-turn encoder	1
Er.830	Battery undervoltage	Replace multi-turn encoder battery	1
Er.BF4	Hardware overcurrent	Unplug the power cord and turn on the power of the servo unit again. If the alarm still occurs, the servo unit may be faulty. Replace the servo unit. If not, confirm whether it is power line or motor failure	1
Er.C10	Runaway alarm	1. Confirm whether the motor wiring is normal 2. Check whether the motor and encoder are normal 3. Reconnect the power supply of the servo drive, if the alarm still occurs, the servo drive may be faulty	1
Er.C90	Encoder communication failure: disconnection	1. The multimeter tests each signal line of the encoder line for any signal line breaks 2. Check the model of the encoder cable to confirm whether the model is correct 3. Check the length of the encoder line, the encoder line should not be too long 4. It may be caused by interference, try to ground the driver or the encoder wire around the magnetic ring 5. Check the parameters of the motor group to confirm whether the motor is correct 6. Eliminate various reasons, the servo driver may be faulty, and replace the servo unit.	1
Er.C91	Encoder communication position data acceleration abnormal		1
Er.CA0	Encoder parameter is abnormal		1

Er.D00	Excessive position deviation	1. Set an appropriate alarm value for excessive position deviation 2. Check whether the encoder cable and the motor cable are connected properly. You can turn the motor by hand to monitor whether Un003 (rotor relative to Z pulse position) changes between 0 ~ 16777216 (24-bit encoder) 3. Calculate whether the pulse frequency input, acceleration planning or electronic gear ratio setting is reasonable 4. Determine whether the relevant parameter settings are reasonable, such as: torque limit, speed limit, inertia ratio, position gain, whether the speed gain is too small, whether the position filter is too large, etc. 5. Calculate whether the motor selection is too small, and the acceleration and deceleration is too slow, resulting in excessive position deviation	1
Er.D01	Position deviation is too large when servo is on	Set the correct value of Pn267 (the position deviation is too large when the servo is ON)	1
Er.D02	Excessive position deviation alarm caused by speed limit when servo is on	Set the correct maximum tolerance of position deviation (Pn264) Or set the speed limit value (Pn270) when the servo is ON to the correct value。	2
Er.D10	Excessive deviation between motor and load position	Confirm the motor rotation direction and external encoder installation direction. Check the mechanical installation. Parameter Pn250 is set to the correct value.	2

6.2. Warning Code

Warning code	Types	Solution
AL.900	Warning of excessive position deviation	1.Set correctly gear ratio, gain, position filter, torque limit etc.
		2.Check connecting cable of motor and encoder
		3.After eliminating reasons, it’s possible .that servo drive malfunction, please replace it.
AL.901	Alarm of position deviation exceed when servo ON	Set correctly threshold value of position deviation excess when servo ON.
AL.910	Overload alarm	1. Check the wiring of motor and encoder.
		2. Inappropriate motor or encoder selection.

AL.911	Vibration alarm	1. Reduce motor speed or speed loop gain.
		2. Correctly set rotation inertial ratio.
AL.920	Regenerative overload alarm	1. Set power voltage within the specification range.
		2. Correctly set the value of resistor and capacity.
		3. Servo drive malfunction and needs replacement.
AL.921	DB overload alarm	1. Reduce the command speed of the servo motor.
		2. Reduce the moment of inertia ratio.
		3. Servo driver problem, replace the servo driver
AL.930	Low battery warning	Replace battery
AL.941	Alarm of re-power due to parameters update	Power off and restart the drive
AL.971	Under voltage alarm	1. Adjust the AC / DC power supply voltage to the range of product specifications.
		2. Increase the power capacity.

Appendix I: Braking Resistor Selection

Model	Braking voltage	Built-in resistors	External resistance minimum value	External resistor maximum value
SD700-1R1A	380V	None	40	400
SD700-1R7A		None	40	200
SD700-3R3A		None	40	100
SD700-5R5A		40Ω 60W	25	70
SD700-7R6A		40Ω 60W	15	50
SD700-9R5A		40Ω 60W	15	40
SD700-2R5D	700V	80Ω 60W	80	225
SD700-3R8D		80Ω 60W	55	180
SD700-6R0D		40Ω 60W	35	110
SD700-8R4D		40Ω 60W	25	85
SD700-110D		40Ω 60W	25	70
SD700-170D		30Ω 200W	30	50
SD700-240D		30Ω 200W	15	40
SD700-300D		30Ω 200W	15	30

Note: If needing external braking resistor, please according to the onsite braking frequency and the braking resistor heat dissipation condition to choose proper braking resistance value on the above table. If any queries, please consult the manufacturer.

VEICHI

Packing list

Items	Description	Quantity
1	Servo Drive	1
2	SCSI Plus(50P)	1
3	Simple Manual	1
4	7P Pluggable Terminals Block	1
5	3P Pluggable Terminals Block	1
6	Terminal Handle	1
Remark: Item 4, 5 and 6 are only for below modes: SD700-1R1A-**/SD700-1R8A-**/SD700-3R3A-**		

When open the package, please carefully check if the contents are consistent with the packing list. Any doubt, please contact your dealer.